Product Brief 2020

SMD Surge Arresters

Gas Discharge Tubes for Overvoltage Protection

Series and applications

- S15
World's smallest 2-electrode surge arrester designed to protect data lines and Ethernet ports

- S20, S25
Miniature 2-electrode surge arrester designed to protect data lines and Ethernet ports

- S30, S32
Miniature 2-electrode surge arrester designed to protect data lines and Ethernet ports

- S50, S5B
Miniature 2-electrode surge arrester with medium current handling capability for cable modems, DSL- line cards etc.

- S8A
Miniature 2-electrode surge arrester with high current handling capability for i.e. antenna protection

- TG20, TG30
Miniature 3-electrode surge arrester designed to protect data lines and Ethernet ports

- TQ90
Miniature 3-electrode surge arrester with medium current handling capability for cable modems, DSL- line cards etc.

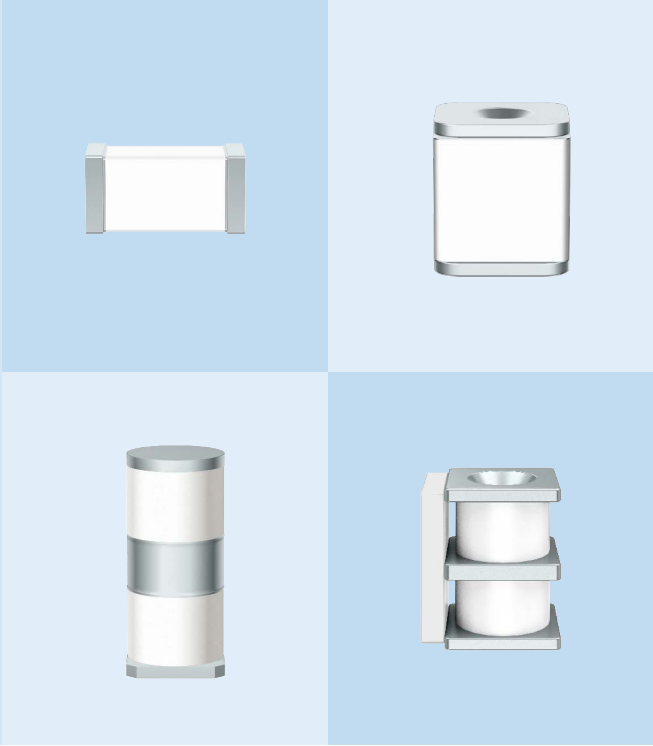

www.tdk-electronics.tdk.com

SMD Surge Arresters

Overvoltage protection of data lines with gas discharge tubes

Voltage surges in telecommunication systems caused by lightning or line power faults can affect sensitive electronic circuitry.

Manufacturers of telecom equipment such as DSL and cable modems using overvoltage protection by gas discharge tubes (GDTs).

GDTs shunt surge currents to ground and limit overvoltages to a harmless level. Major advantages are their extremely low capacitance and high insulation resistance, making them almost invisible in normal operation.

In the new S32, S5 and S8 series TDK offers arresters with high current handling capability combined with excellent SMD configurability.

In the new miniature series S15, S20, S30 (2-electrode arrester) and TG3 (3-electrode arrester) TDK has now also introduced overvoltage protection by gas-filled surge arresters for applications where space is a limiting factor.

Overvoltage protection in power circuits

SMD Surge arresters as S30-A90X, S20-A140X in parallel to chokes eliminate the energy to avoid overvoltage's due to oscillation during switch on/off.

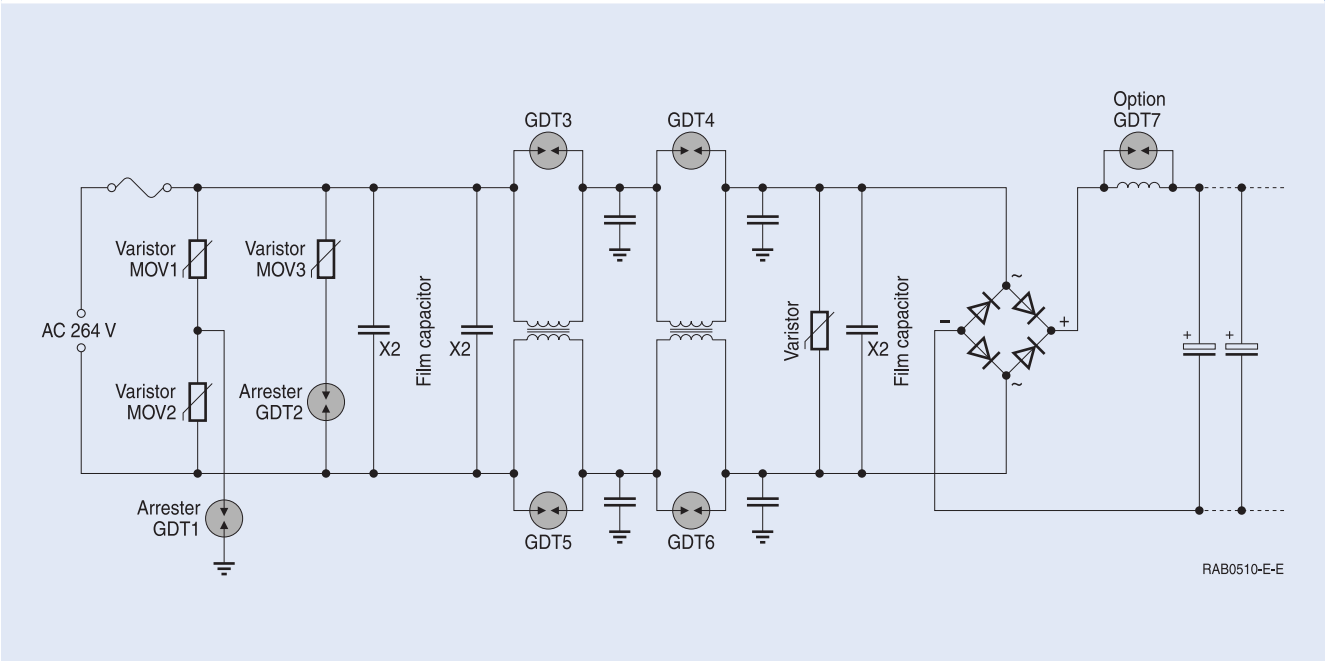

For further information please contact your local sales office.

SMD Surge Arresters

Gigabit Ethernet

Line to GND 6.0 kV, 10/700 µs @ 40 Ω
Surge arrester suggested types: S30-A90X, S20-A140X, S25-A90X or 3-electrode TG30-A90XSMD

Gigabit Ethernet surge solution 1

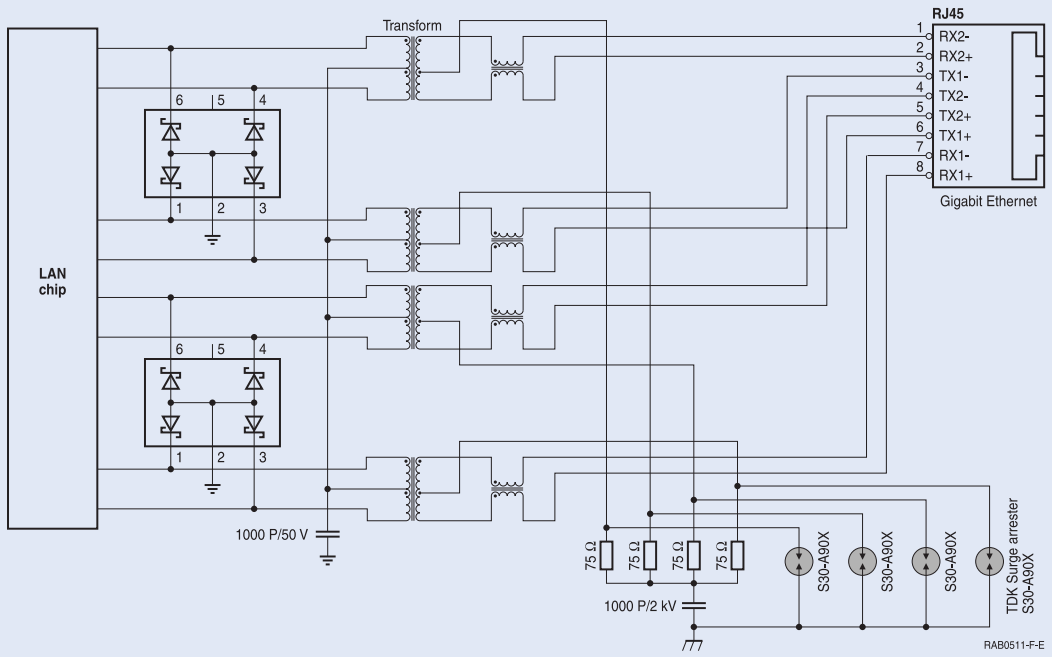

Gigabit Ethernet surge solution 2

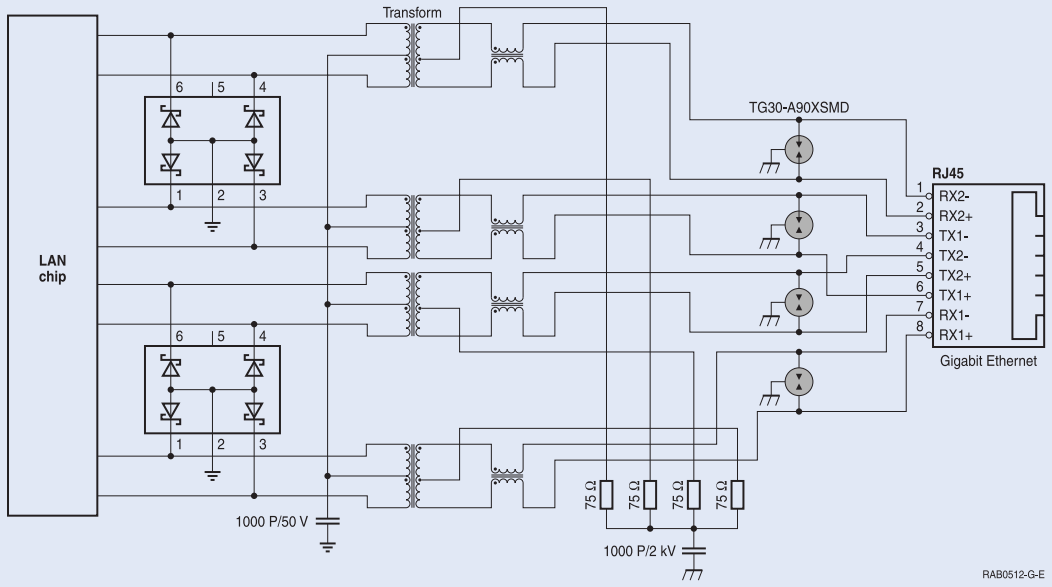

Outdoor Gigabit Ethernet surge solution 2-electrode (Power over Ethernet)

Standard IEC 61000-4-5

- Common mode 6 kV 10 operations
  [5x (+) & 5x (–)] in 1.2/50 µs load 12 Ω
  - **Surge arrester suggested type:**
    S30-A90X
    (10 operations [5x (+) & 5x (–)] 8/20 µs 3 kA) or
    3-electrode TG30-A90XSMD
    (10 operations [5x (+) & 5x (–)] 8/20 µs 3 kA)
  - **CTVS suggested type:**
    CT2220S50E3G
    (10 operations 8/20 µs 3 kA)

Standard ITU-T K21

- Common mode 6 kV 10 operations
  [5x (+) & 5x (–)] in 1.2/50 µs load 10 Ω
  - **Surge arrester suggested type:**
    2-electrode S30-A90X
    (10 operations [5x (+) & 5x (–)] 8/20 µs 3 kA) or
    3-electrode TG30-A90XSMD
    (10 operations [5x (+) & 5x (–)] 8/20 µs 3 kA)
  - **CTVS suggested type:**
    CT1812KS0E2G_U
    (10 operations [5x (+) & 5x (–)] 8/20 µs 1.5 kA)

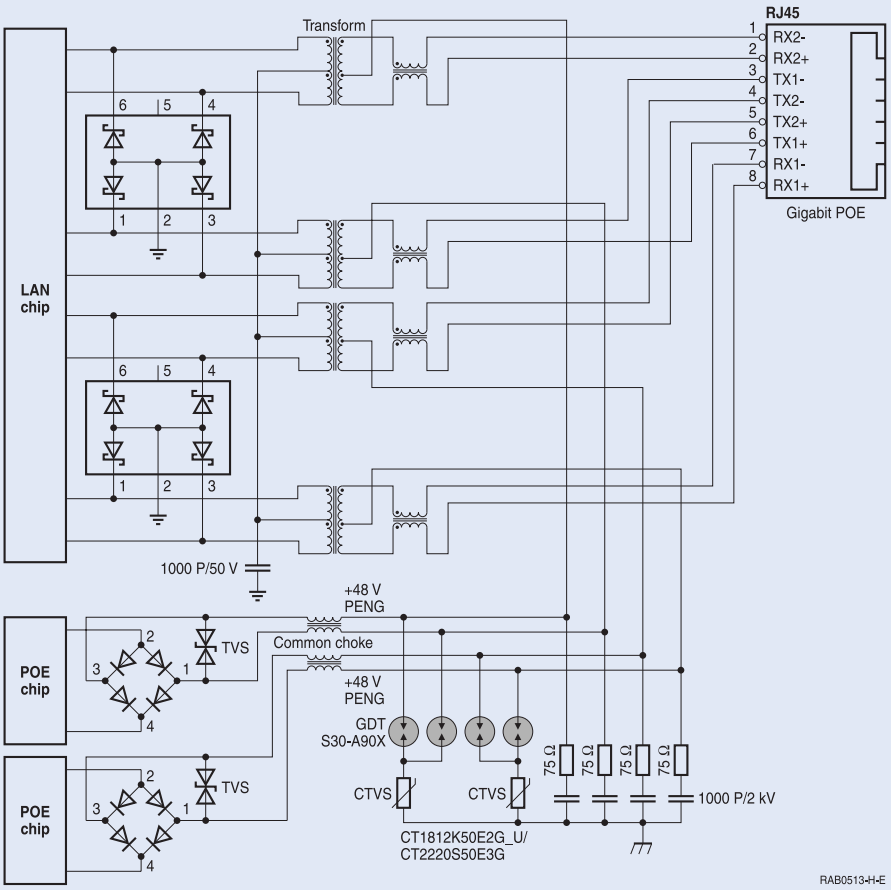

SMD Surge Arresters

Outdoor Gigabit Ethernet surge solution 3-electrode (Power over Ethernet)

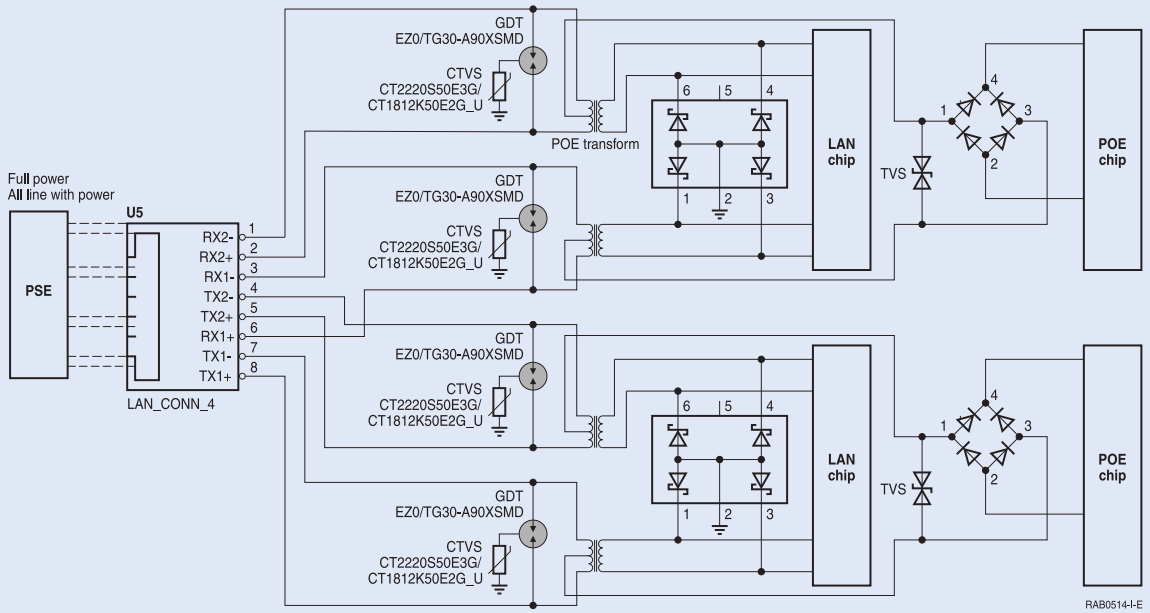

SMD Surge Arresters

EPCOS

2-electrode arresters

Series	S15…	S20…			Unit
Type SMD	S15-A140	S20-A140X	S20-A200X	S20-A470X	
Ordering code	B88069X5373N104	B88069X3013T303	B88069X97313T303	B88069X1193T303	
Dimensions	2 × 1.2 × 1.2 EIA 0805/ metric 2012	3.2 × 1.6 × 1.6 EIA size 1206/ metric 3216			mm
Nom. DC spark overvoltage V_{sdcN}	140	140	200	470	V
Tolerance of V_{sdcN}	±30	±30	±30	±30	%
Impulse spark-overvoltage					
@ 100 V/µs 90% of measured values	< 600	< 800	< 600	< 1050	V
@ 100 V/µs typical values	< 500	< 700	< 500	< 950	V
@ 1 kV/µs 90% of measured values	< 800	< 900	< 800	< 900	V
@ 1 kV/µs typical values	< 700	< 800	< 700	< 800	V
Service life					
10 operations 8/20 µs	0.25	0.5	0.5	0.5	kA
10 operations 5/320 µs	150	150	150	150	A
Insulation resistance	> 1	> 1	> 1	> 1	GΩ
Capacitance @ 1 MHz	< 0.1	< 0.3	< 0.3	< 0.3	pF

Series	S25…			
Type SMD	S25-A90X	S25-A200X	S25-C420X	
Ordering code	B88069X2253T203	B88069X2263T203	B88069X4813T203	
Dimensions	3.2 × 2.5 × 2.5 EIA size 1210/ metric 3225			mm
Nom. DC spark overvoltage V_{sdcN}	90	200	420	V
Tolerance of V_{sdcN}	±20	±20	–15/+35	%
Impulse spark-overvoltage				
@ 100 V/µs 90% of measured values	< 500	< 700	< 850	V
@ 100 V/µs typical values	< 400	< 500	< 750	V
@ 1 kV/µs 90% of measured values	< 700	< 850	< 950	V
@ 1 kV/µs typical values	< 600	< 700	< 900	V
Service life				
10 operations 50 Hz, 1 s	–	–	1	A
10 operations 8/20 µs	1	1	1	kA
10 operations 5/320 µs	150	150	150	A
Insulation resistance	> 1	> 1	> 1	GΩ
Capacitance @ 1 MHz	< 0.3	< 0.3	< 0.3	pF

SMD Surge Arresters

2-electrode surge arresters

Series	S30…					Unit
Type SMD	S30-A75X	S30-A90X	S30-A230X	S30-A230XS	S30-A300XS	
Ordering code	B88069X1023T253	B88069X9231T253	B88069X5941T253	B88069X9801T253	B88069X6891T253	
Dimensions	4.5 × 3.2 × 2.7 EIA case size 1812/ metric 4532					mm
Nom. DC spark overvoltage V_{sdcN}	75	90	230	230	300	V
Tolerance of V_{sdcN}	±30	±30	±25	±30	±30	%
Impulse spark-overvoltage						
@ 100 V/µs 90% of measured values	< 400	< 500	< 650	< 500	< 580	V
@ 100 V/µs typical values	< 350	< 400	< 550	< 400	< 500	V
@ 1 kV/µs 90% of measured values	< 700	< 600	< 800	< 600	< 650	V
@ 1 kV/µs typical values	< 650	< 500	< 700	< 500	< 550	V
Service life						
10 operations 50 Hz, 1 s	2.5	2.5	2	–	–	A
300 operations 8/20 µs	100	100	100	100	100	A
10 operations 8/20 µs	3	3	2	1	1	kA
1 operation 8/20 µs	3.5	3.5	2	2	2	kA
10 operations 5/320 µs	150	150	150	150	150	A
10 operations 10/1000 µs	10	10	10	10	10	A
Insulation resistance	> 1	> 1	> 1	> 1	> 1	GΩ
Capacitance @ 1 MHz	< 0.4	< 0.4	< 0.4	< 0.4	< 0.4	pF

Series	S30…				
Type SMD	S30-A350X	S30-A400X	S30-A420XS	S30-A600XS	
Ordering code	B88069X8361T253	B88069X5211T253	B88069X6311T253	B88069X2673T253	
Dimensions	4.5 × 3.2 × 2.7 EIA case size 1812/ metric 4532				mm
Nom. DC spark overvoltage V_{sdcN}	350	400	420	600	V
Tolerance of V_{sdcN}	±25	±25	±25	±25	%
Impulse spark-overvoltage					
@ 100 V/µs 90% of measured values	< 750	< 800	< 650	< 1100	V
@ 100 V/µs typical values	< 600	< 650	< 550	< 1000	V
@ 1 kV/µs 90% of measured values	< 900	< 950	< 750	< 1200	V
@ 1 kV/µs typical values	< 750	< 800	< 600	< 1100	V
Service life					
10 operations 50 Hz, 1 s	2	2	–	2	A
300 operations 8/20 µs	100	100	100	100	A
10 operations 8/20 µs	2	2	1	1	kA
1 operation 8/20 µs	2.5	2.5	–	–	kA
10 operations 5/320 µs	150	150	150	150	A
10 operations 10/1000 µs	10	10	10	10	A
Insulation resistance	> 1	> 1	> 1	> 1	GΩ
Capacitance @ 1 MHz	< 0.4	< 0.4	< 0.4	< 0.4	pF

SMD Surge Arresters

EPCOS

2-electrode surge arresters					
Series	**S32…**	**S50…**		**S5B…**	**Unit**
Type SMD	**S32-A90X**	**S50-A90X**	**S50-A230X**	**S5B-A90XHC**	
Ordering code	upon request	B88069X1913T902	B88069X1923T902	B88069X5923T902	
Dimensions	4.5 × 3.2 × 3.2	5.7 × 5 × 5 EIA size 2220/ metric 5750		5 × 5.4 × 5.4	mm
Nom. DC spark overvoltage V_{sdcN}	90	90	230	230	V
Tolerance of V_{sdcN}	±20	±20	±20	±20	%
Impulse spark-overvoltage					
@ 100 V/µs 90% of measured values	< 500	< 550	< 550	< 500	V
@ 100 V/µs typical values	< 400	< 500	< 500	< 450	V
@ 1 kV/µs 90% of measured values	< 600	< 600	< 650	< 600	V
@ 1 kV/µs typical values	< 500	< 550	< 600	< 550	V
Service life					
10 operations 50 Hz, 1 s	5	5	5	10	A
10 operations 8/20 µs	5	5	5	10	kA
1 operation 8/20 µs	–	10	10	12	kA
10 operations 5/320 µs	150	–	–	–	A
1 operation 10/350 µs	0.5	0.5	0.5	1	kA
300 operations 10/1000 µs	10	100	100	100	A
Insulation resistance	> 1	> 1	> 1	> 1	GΩ
Capacitance @ 1 MHz	< 0.4	< 1	< 1	< 0.5	pF
Series	**S8A…**				
Type SMD	**S8A-A75XHC**	**S8A-A90XHC**	**S8A-A230XHC**	**S8A-A350XHC**	
Ordering code	B88069X5733T602	B88069X4693T602	B88069X5783T602	B88069X5803T602	
Dimensions	6 × 8.3 × 8.3				mm
Nom. DC spark overvoltage V_{sdcN}	75	90	230	350	V
Tolerance of V_{sdcN}	±20	±20	±20	±20	%
Impulse spark-overvoltage					
@ 100 V/µs 90% of measured values	< 350	< 500	< 550	< 700	V
@ 100 V/µs typical values	< 300	< 450	< 500	< 650	V
@ 1 kV/µs 90% of measured values	< 550	< 600	< 650	< 900	V
@ 1 kV/µs typical values	< 500	< 550	< 600	< 850	V
Service life					
10 operations 50 Hz, 1 s	20	20	20	20	A
10 operations 8/20 µs	20	20	20	20	kA
1 operation 8/20 µs	25	25	25	25	kA
1 operation 10/350 µs	5	5	5	5	kA
300 operations 10/1000 µs	100	100	100	100	A
Insulation resistance	> 1	> 1	> 1	> 1	GΩ
Capacitance @ 1 MHz	< 1.5	< 1.5	< 1.5	< 1.5	pF

SMD Surge Arresters

EPCOS

3-electrode surge arresters				
Series	**TG20…**			**Unit**
Type SMD	**TG20-C420SMD6**			
Ordering code	B88069X5433T203			
Dimensions	3.8 × 2.7 × 4.2			mm
Nom. DC spark overvoltage V_{sdcN}	420			V
Tolerance of V_{sdcN}	–15/+33			%
Impulse spark-overvoltage				
@ 100 V/µs 90% of measured values	< 850			V
@ 100 V/µs typical values	< 750			V
@ 1 kV/µs 90% of measured values	< 1000			V
@ 1 kV/µs typical values	< 920			V
Service life				
1 operation 8/20 µs	2			kA
10 operations 5/320 µs	150			A
Insulation resistance	> 1			GΩ
Capacitance @ 1 MHz	< 1			pF
Series	**TG30…**		**TQ90…**	**Unit**
Type SMD	**TG30-A90XSMD**	**TG30-A420XSMDS**	**TQ90-A90**	
Ordering code	B88069X9991T203	B88069X1833T203	B88069X1963T902	
Dimensions	ø3.5 × 6.8		5 × 5 × 7.6	mm
Nom. DC spark overvoltage V_{sdcN}	90	420	90	V
Tolerance of V_{sdcN}	±30	±30	±20	%
Impulse spark-overvoltage				
@ 100 V/µs 90% of measured values	> 450	< 700	< 450	V
@ 100 V/µs typical values	< 350	< 600	< 350	V
@ 1 kV/µs 90% of measured values	< 650	< 800	< 650	V
@ 1 kV/µs typical values	< 550	< 700	< 550	V
Service life				
10 operations 50 Hz, 1 s	6	2	10	A
300 operations 8/20 µs	100	100	–	A
10 operations 8/20 µs	6	3	10	kA
1 operation 8/20 µs	–	–	15	kA
10 operations 5/320 µs	150	150	150	A
10 operations 10/1000 µs	–	–	200	A
1 operation 10/350 µs	–	–	2	kA
300 operations 10/1000 µs	20	20	200	A
Insulation resistance	> 1	> 1	> 1	GΩ
Capacitance @ 1 MHz	< 1.2	< 1.2	< 1.2	pF

SMD Surge Arresters

2-electrode surge arresters

S15…

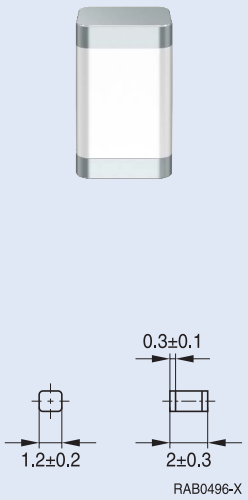

S20…

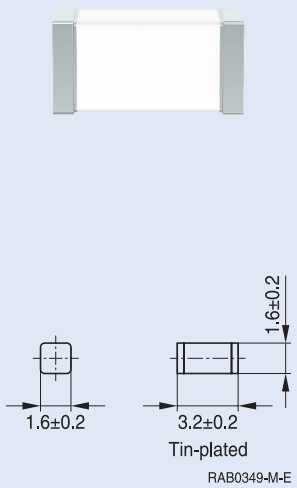

S25…

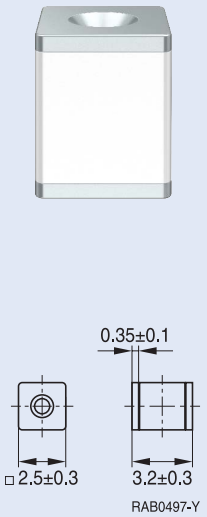

S30…

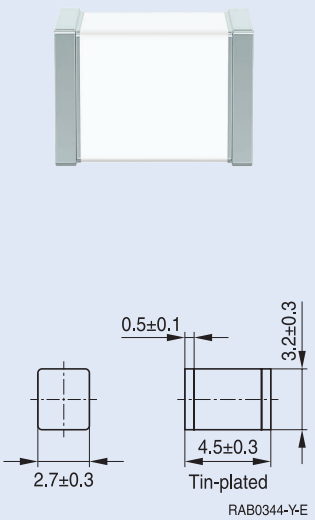

S32…

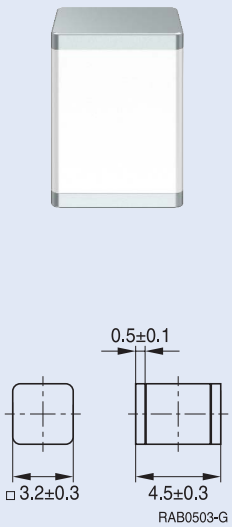

S50…

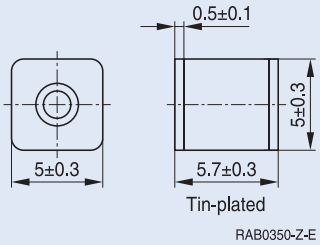

SMD Surge Arresters

2-electrode surge arresters

S5B…

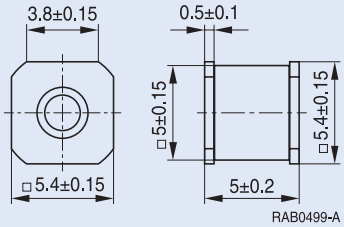

S8A…

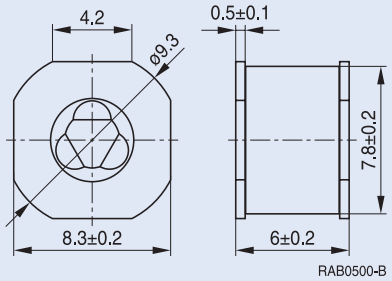

3-electrode surge arresters

TG20…

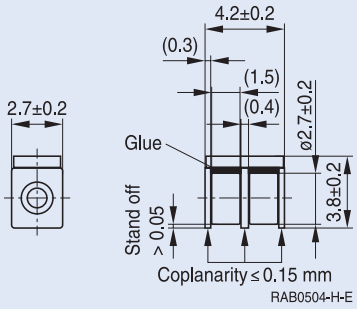

TG30…

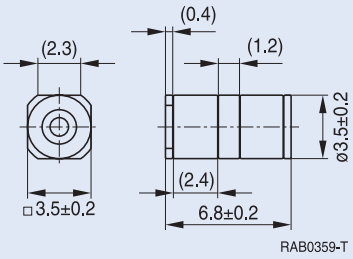

TQ90…

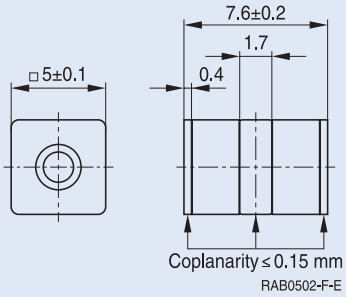

Edition 09/2020 · Ordering No. EPC:48018-7600 · Printed in Germany · PB 0920.5